74LVX20

LOW VOLTAGE CMOS DUAL 4-INPUT NAND GATE WITH 5V TOLERANT INPUTS

- HIGH SPEED:
  t_{PD} = 4.1ns (TYP.) at V_{CC} = 3.3V
- 5V TOLERANT INPUTS
- INPUT VOLTAGE LEVEL:
  V_{IL}=0.8V, V_{IH}=2V at V_{CC}=3V
- LOW POWER DISSIPATION:
  I_{CC} = 2 µA (MAX.) at T_A=25°C
- LOW NOISE:
  V_{OLP} = 0.3V (TYP.) at V_{CC} = 3.3V
- SYMMETRICAL OUTPUT IMPEDANCE:
  $|I_{OH}| = I_{OL}$ = 4mA (MIN)
- BALANCED PROPAGATION DELAYS:
  $t_{PLH} \cong t_{PHL}$
- OPERATING VOLTAGE RANGE:
  V_{CC}(OPR) = 2V to 3.6V (1.2V Data Retention)
- PIN AND FUNCTION COMPATIBLE WITH 74 SERIES 20
- IMPROVED LATCH-UP IMMUNITY
- POWER DOWN PROTECTION ON INPUTS

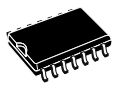

SOP



TSSOP

Table 1: Order Codes

PACKAGE	T & R
SOP	74LVX20MTR
TSSOP	74LVX20TTR

DESCRIPTION

The 74LVX20 is a low voltage CMOS DUAL 4-INPUT NAND GATE fabricated with sub-micron silicon gate and double-layer metal wiring C^2MOS technology. It is ideal for low power, battery operated and low noise 3.3V applications.

The internal circuit is composed of 3 stages including buffer output, which provides high noise immunity and stable output.

Power down protection is provided on all inputs and 0 to 7V can be accepted on inputs with no regard to the supply voltage.

This device can be used to interface 5V to 3V system. It combines high speed performance with the true CMOS low power consumption.

All inputs and outputs are equipped with protection circuits against static discharge, giving them 2KV ESD immunity and transient excess voltage.

Figure 1: Pin Connection And IEC Logic Symbols

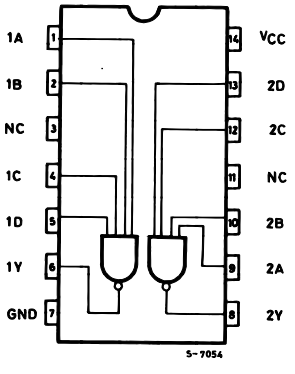

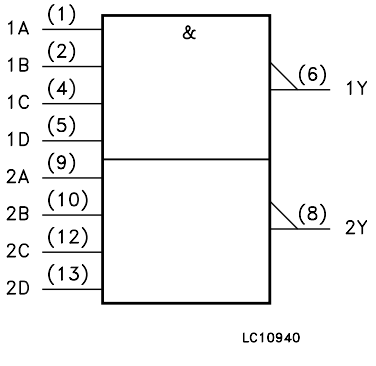

Figure 2: Input Equivalent Circuit

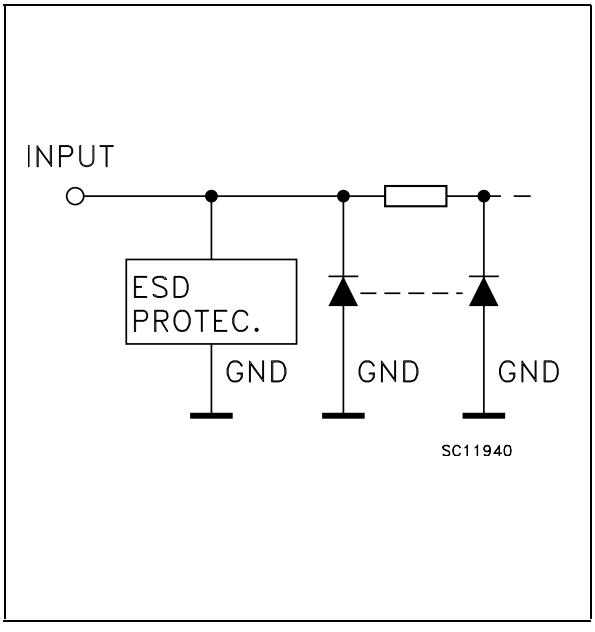

Table 2: Pin Description

PIN N°	SYMBOL	NAME AND FUNCTION
1, 9	1A to 2A	Data Inputs
2, 10	1B to 2B	Data Inputs
3, 11	N.C.	Not Connected
4, 12	1C to 2C	Data Inputs
5, 13	1D to 2D	Data Inputs
6, 8	1Y to 2Y	Data Outputs
7	GND	Ground (0V)
14	V_{CC}	Positive Supply Voltage

Table 3: Truth Table

A	B	C	D	Y
L	X	X	X	H
X	L	X	X	H
X	X	L	X	H
X	X	X	L	H
H	H	H	H	L

X : Don't Care

Table 4: Absolute Maximum Ratings

Symbol	Parameter	Value	Unit
V_{CC}	Supply Voltage	-0.5 to +7.0	V
V_I	DC Input Voltage	-0.5 to +7.0	V
V_O	DC Output Voltage	-0.5 to V_{CC} + 0.5	V
I_{IK}	DC Input Diode Current	- 20	mA
I_{OK}	DC Output Diode Current	± 20	mA
I_O	DC Output Current	± 25	mA
I_{CC} or I_{GND}	DC V_{CC} or Ground Current	± 50	mA
T_{stg}	Storage Temperature	-65 to +150	°C
T_L	Lead Temperature (10 sec)	300	°C

Absolute Maximum Ratings are those values beyond which damage to the device may occur. Functional operation under these conditions is not implied.

Table 5: Recommended Operating Conditions

Symbol	Parameter	Value	Unit
V_{CC}	Supply Voltage (note 1)	2 to 3.6	V
V_I	Input Voltage	0 to 5.5	V
V_O	Output Voltage	0 to V_{CC}	V
T_{op}	Operating Temperature	-55 to 125	°C
dt/dv	Input Rise and Fall Time (note 2) (V_{CC} = 3.3V)	0 to 100	ns/V

1) Truth Table guaranteed: 1.2V to 3.6V
2) V_{IN} from 0.8V to 2.0V

Table 6: DC Specifications

Symbol	Parameter	Test Condition		Value							Unit
		V_{CC} (V)		T_A = 25°C			-40 to 85°C		-55 to 125°C		
				Min.	Typ.	Max.	Min.	Max.	Min.	Max.	
V_{IH}	High Level Input Voltage	2.0		1.5			1.5		1.5		V
		3.0		2.0			2.0		2.0		
		3.6		2.4			2.4		2.4		
V_{IL}	Low Level Input Voltage	2.0				0.5		0.5		0.5	V
		3.0				0.8		0.8		0.8	
		3.6				0.8		0.8		0.8	
V_{OH}	High Level Output Voltage	2.0	I_O=-50 µA	1.9	2.0		1.9		1.9		V
		3.0	I_O=-50 µA	2.9	3.0		2.9		2.9		
		3.0	I_O=-4 mA	2.58			2.48		2.4		
V_{OL}	Low Level Output Voltage	2.0	I_O=50 µA		0.0	0.1		0.1		0.1	V
		3.0	I_O=50 µA		0.0	0.1		0.1		0.1	
		3.0	I_O=4 mA			0.36		0.44		0.55	
I_I	Input Leakage Current	3.6	V_I = 5V or GND			± 0.1		± 1		± 1	µA
I_{CC}	Quiescent Supply Current	3.6	V_I = V_{CC} or GND			2		20		20	µA

Table 7: Dynamic Switching Characteristics

Symbol	Parameter	Test Condition		Value							Unit
		V_{CC} (V)		T_A = 25°C			-40 to 85°C		-55 to 125°C		
				Min.	Typ.	Max.	Min.	Max.	Min.	Max.	
V_{OLP}	Dynamic Low Voltage Quiet Output (note 1, 2)	3.3	C_L = 50 pF		0.3	0.5					V
V_{OLV}				-0.5	-0.3						
V_{IHD}	Dynamic High Voltage Input (note 1, 3)	3.3		2							
V_{ILD}	Dynamic Low Voltage Input (note 1, 3)	3.3				0.8					

1) Worst case package.
2) Max number of outputs defined as (n). Data inputs are driven 0V to 3.3V, (n-1) outputs switching and one output at GND.
3) Max number of data inputs (n) switching. (n-1) switching 0V to 3.3V. Inputs under test switching: 3.3V to threshold (V_{ILD}), 0V to threshold (V_{IHD}), f=1MHz.

Table 8: AC Electrical Characteristics (Input $t_r = t_f = 3ns$)

Symbol	Parameter	Test Condition			Value							Unit
		V_{CC} (V)	C_L (pF)		T_A = 25°C			-40 to 85°C		-55 to 125°C		
					Min.	Typ.	Max.	Min.	Max.	Min.	Max.	
t_{PLH} t_{PHL}	Propagation Delay Time	2.7	15				8.6	1.0	10.5	1.0	11.5	ns
		2.7	50				13.5	1.0	15.4	1.0	16.4	
		3.3(*)	15			4.1	6.2	1.0	7.5	1.0	9.5	
		3.3(*)	50			6.6	9.7	1.0	11.0	1.0	12.0	
t_{OSLH} t_{OSHL}	Output To Output Skew Time (note1, 2)	2.7	50			0.5	1.0		1.5		1.5	ns
		3.3(*)	50			0.5	1.0		1.5		1.5	

1) Skew is defined as the absolute value of the difference between the actual propagation delay for any two outputs of the same device switching in the same direction, either HIGH or LOW
2) Parameter guaranteed by design
(*) Voltage range is 3.3V ± 0.3V

Table 9: Capacitive Characteristics

Symbol	Parameter	Test Condition		Value							Unit
		V_{CC} (V)		T_A = 25°C			-40 to 85°C		-55 to 125°C		
				Min.	Typ.	Max.	Min.	Max.	Min.	Max.	
C_{IN}	Input Capacitance	3.3			4	10		10		10	pF
C_{PD}	Power Dissipation Capacitance (note 1)	3.3			19						pF

1) C_{PD} is defined as the value of the IC's internal equivalent capacitance which is calculated from the operating current consumption without load. (Refer to Test Circuit). Average operating current can be obtained by the following equation. $I_{CC(opr)} = C_{PD} \times V_{CC} \times f_{IN} + I_{CC}/2$ (per gate)

Figure 3: Test Circuit

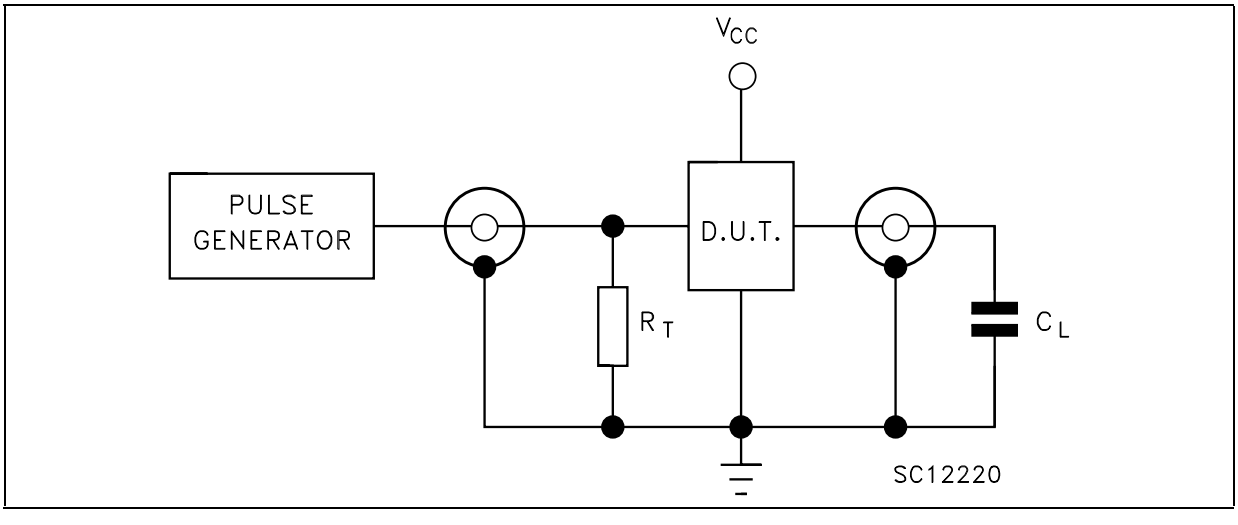

C_L =15/50pF or equivalent (includes jig and probe capacitance)
$R_T = Z_{OUT}$ of pulse generator (typically 50Ω)

Figure 4: Waveform - Propagation Delays (f=1MHz; 50% duty cycle)

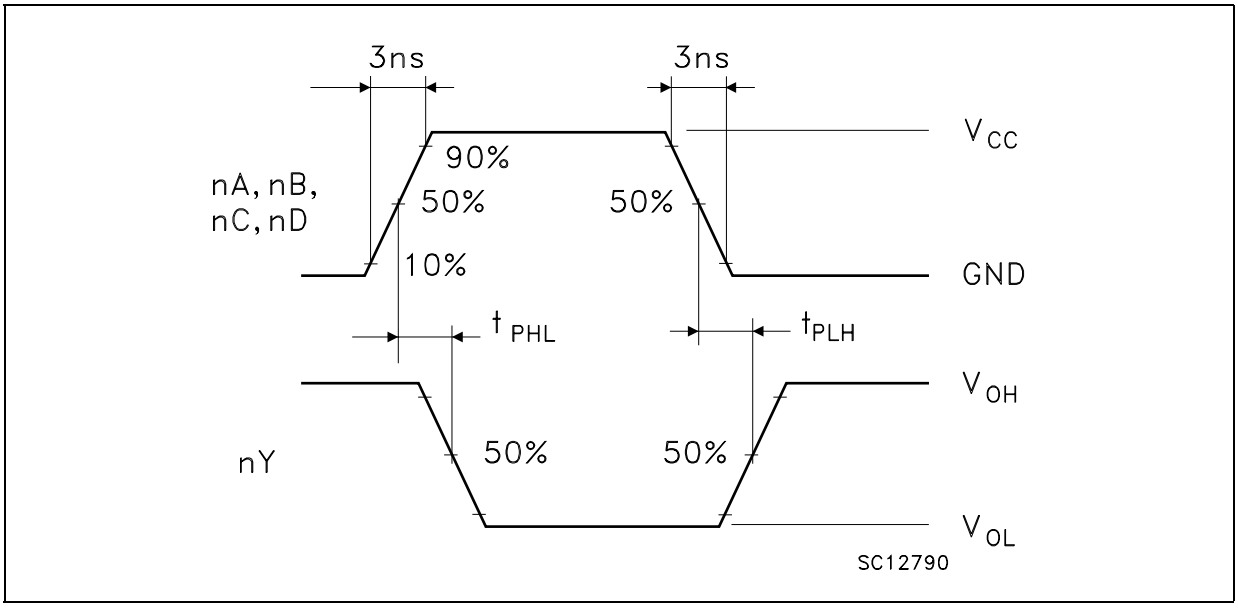

SO-14 MECHANICAL DATA

DIM.	mm.			inch		
	MIN.	TYP	MAX.	MIN.	TYP.	MAX.
A	1.35		1.75	0.053		0.069
A1	0.1		0.25	0.004		0.010
A2	1.10		1.65	0.043		0.065
B	0.33		0.51	0.013		0.020
C	0.19		0.25	0.007		0.010
D	8.55		8.75	0.337		0.344
E	3.8		4.0	0.150		0.157
e		1.27			0.050	
H	5.8		6.2	0.228		0.244
h	0.25		0.50	0.010		0.020
L	0.4		1.27	0.016		0.050
k	0°		8°	0°		8°
ddd			0.100			0.004

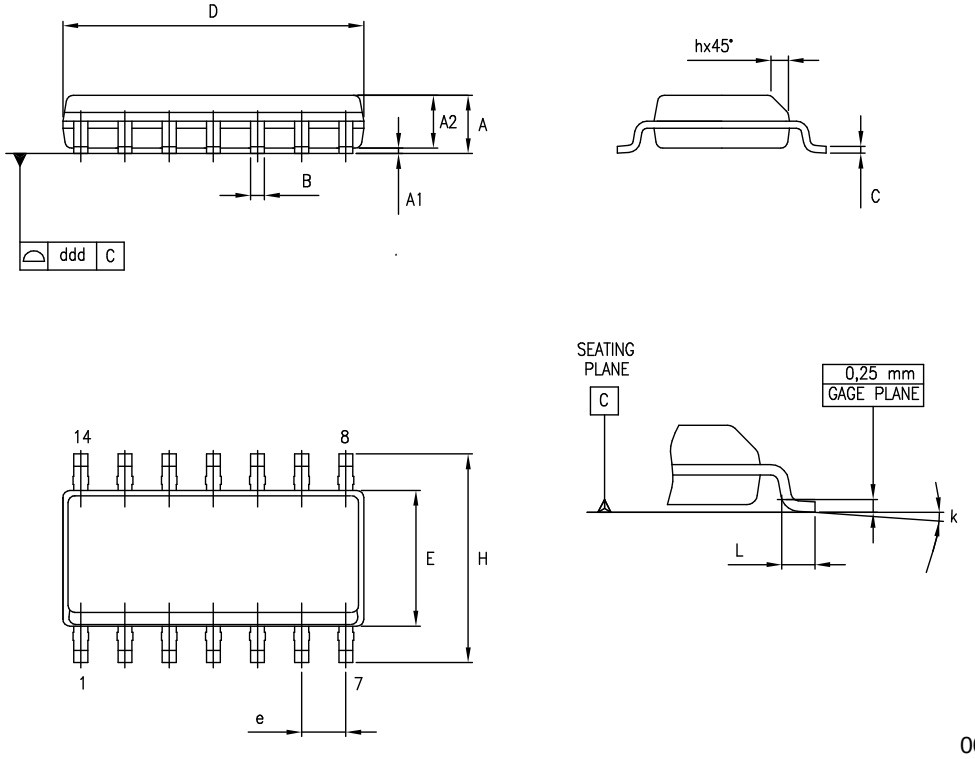

0016019D

TSSOP14 MECHANICAL DATA

DIM.	mm.			inch		
	MIN.	TYP	MAX.	MIN.	TYP.	MAX.
A			1.2			0.047
A1	0.05		0.15	0.002	0.004	0.006
A2	0.8	1	1.05	0.031	0.039	0.041
b	0.19		0.30	0.007		0.012
c	0.09		0.20	0.004		0.0089
D	4.9	5	5.1	0.193	0.197	0.201
E	6.2	6.4	6.6	0.244	0.252	0.260
E1	4.3	4.4	4.48	0.169	0.173	0.176
e		0.65 BSC			0.0256 BSC	
K	0°		8°	0°		8°
L	0.45	0.60	0.75	0.018	0.024	0.030

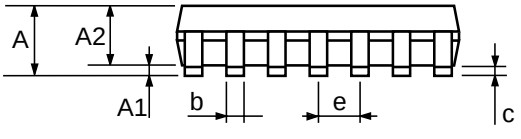

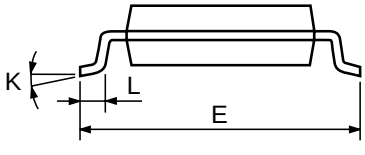

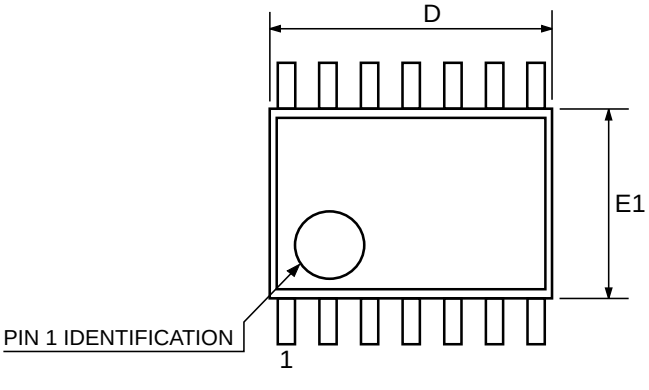

0080337D

Tape & Reel SO-14 MECHANICAL DATA

DIM.	mm.			inch		
	MIN.	TYP	MAX.	MIN.	TYP.	MAX.
A			330			12.992
C	12.8		13.2	0.504		0.519
D	20.2			0.795		
N	60			2.362		
T			22.4			0.882
Ao	6.4		6.6	0.252		0.260
Bo	9		9.2	0.354		0.362
Ko	2.1		2.3	0.082		0.090
Po	3.9		4.1	0.153		0.161
P	7.9		8.1	0.311		0.319

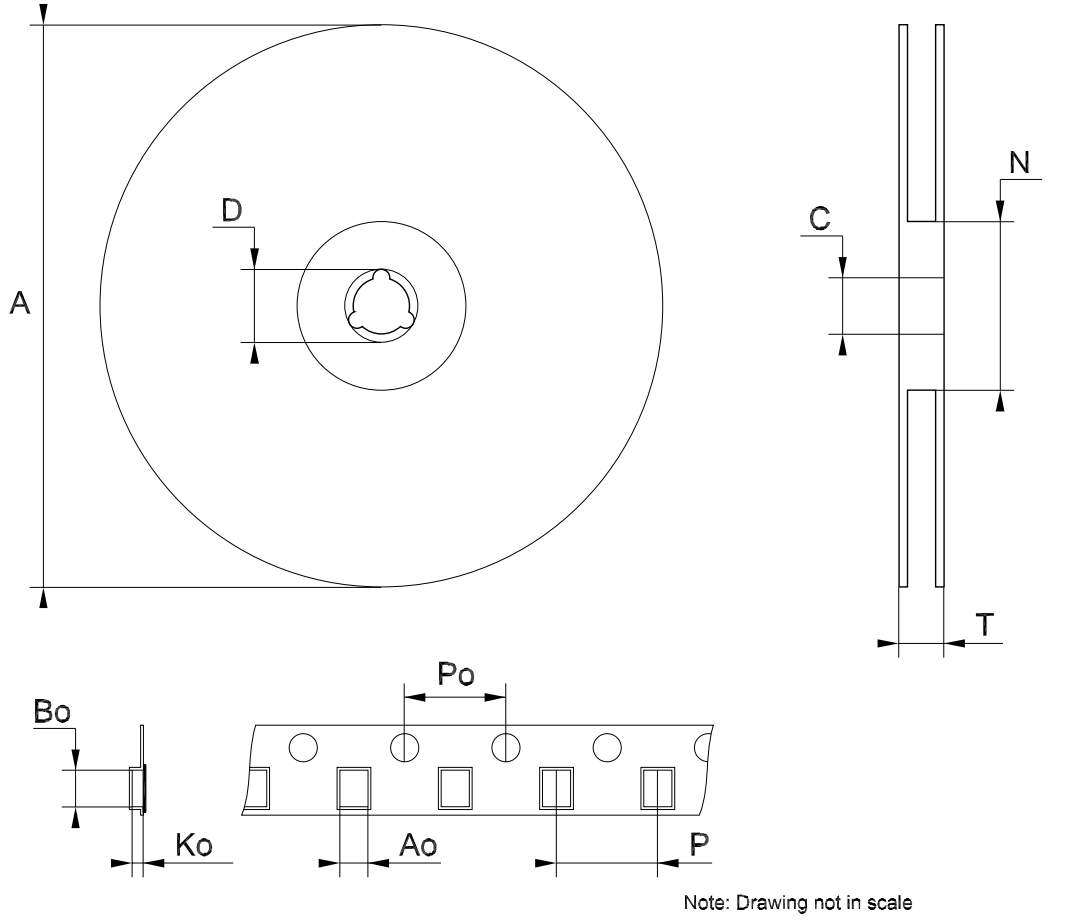

Note: Drawing not in scale

Tape & Reel TSSOP14 MECHANICAL DATA

DIM.	mm.			inch		
	MIN.	TYP	MAX.	MIN.	TYP.	MAX.
A			330			12.992
C	12.8		13.2	0.504		0.519
D	20.2			0.795		
N	60			2.362		
T			22.4			0.882
Ao	6.7		6.9	0.264		0.272
Bo	5.3		5.5	0.209		0.217
Ko	1.6		1.8	0.063		0.071
Po	3.9		4.1	0.153		0.161
P	7.9		8.1	0.311		0.319

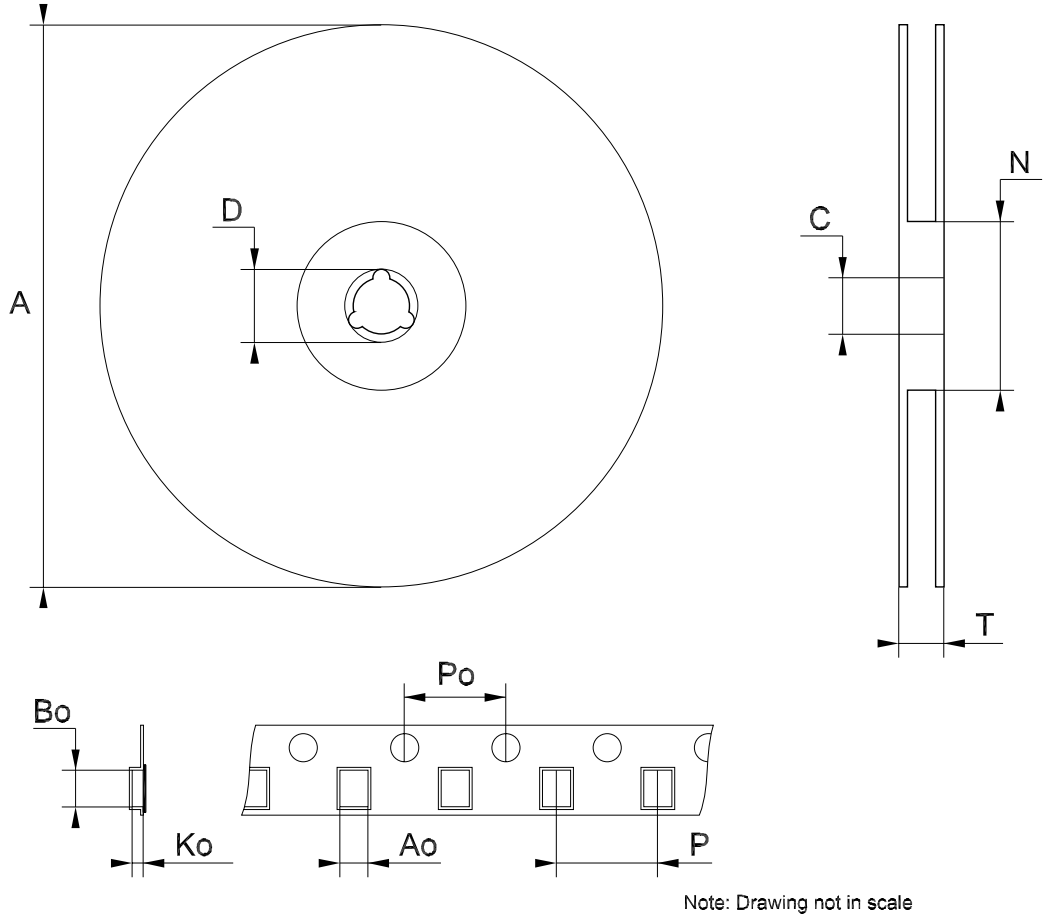

Note: Drawing not in scale

Table 10: Revision History

Date	Revision	Description of Changes
27-Aug-2004	3	Ordering Codes Revision - pag. 1.

Information furnished is believed to be accurate and reliable. However, STMicroelectronics assumes no responsibility for the consequences of use of such information nor for any infringement of patents or other rights of third parties which may result from its use. No license is granted by implication or otherwise under any patent or patent rights of STMicroelectronics. Specifications mentioned in this publication are subject to change without notice. This publication supersedes and replaces all information previously supplied. STMicroelectronics products are not authorized for use as critical components in life support devices or systems without express written approval of STMicroelectronics.

The ST logo is a registered trademark of STMicroelectronics

All other names are the property of their respective owners

© 2004 STMicroelectronics - All Rights Reserved

STMicroelectronics group of companies

Australia - Belgium - Brazil - Canada - China - Czech Republic - Finland - France - Germany - Hong Kong - India - Israel - Italy - Japan - Malaysia - Malta - Morocco - Singapore - Spain - Sweden - Switzerland - United Kingdom - United States of America

www.st.com

This datasheet has been download from:

www.datasheetcatalog.com

Datasheets for electronics components.